THIS DOCUMENT AND THE INFORMATION DISCLOSED HEREIN IS PROPRIETARY TO HONEYWELL, AND UNLESS OTHERWISE SPECIFIED HEREIN WITHOUT AGREEMENT NOT HEREIN BE REPRODUCED OR COPIED IN WHOLE OR IN PART OR DISCLOSED TO OTHERS NOR EMPLOYED FOR DESIGN, FABRICATION, OR MANUFACTURING PURPOSES WITHOUT THE PRIOR PERMISSION OF HONEYWELL.

REVISIONS

REV	DESCRIPTION	DRAWN BY	DATE	APPROVED
A	ADDED -1 VERSION		7/77	
B	WAS DWG NO HM 6071		10/78	
C	REDRAWN	TC	10/10/80	
D	ADDED THD DEPTH	JS	8/9/88	
E	ECO19D3, ADDED "5" CONF	CJM	10/12/00	

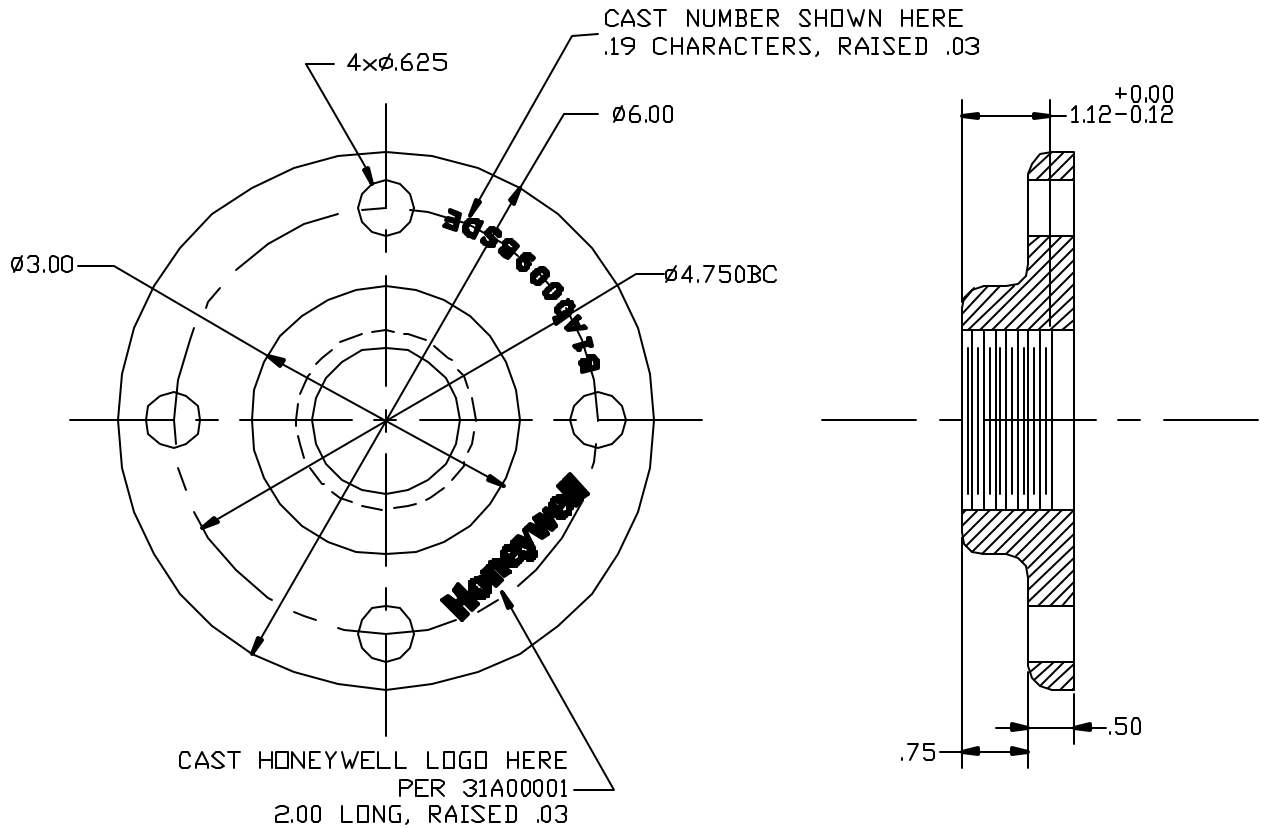

CONFIGURATION TABLE

PART NO	MADE FROM	DESCRIPTION
B1A0009SDE5	MADE FROM "2"	FINISHED & PAINTED YELLOW 4
B1A0009SDE4	MADE FROM "2"	CHEM COAT, FINISHED & PAINTED ORANGE 3
B1A0009SDE3	MADE FROM "2	FINISHED & PAINTED ORANGE 3
B1A0009SDE2	MADE FROM "1"	MACHINED CASTING
B1A0009SDE1	SEE NOTE 2	RAW CASTING

3. YELLOW PAINT PER CARDINAL # T669-YL35, FED-STD-013530, YELLOW
4. INTERNATIONAL ORANGE ALKYD ENAMEL, PER FED-STD-595, NO 12197, TT-E-489, 3 COATS, 2 MILS.
3. ZINC CHROMATE PRIMER TT-P-1757, CONF L, COLOR Y, ONE COAT.
2. MATERIAL: AL AL 43 OR 23A, PER QQ-A-601.
1. DELETED.

NOTES: UNLESS OTHERWISE SPECIFIED

NEXT ASSY	USED ON
APPLICATION	

UNLESS OTHERWISE SPECIFIED, DIMENSION ARE IN INCHES PER ANSI Y14.5M-1994
TOLERANCES ARE: FRACTIONAL ± ; ANGLES ±1/2 ; DECIMALS .XX ± .03 ; .XXX ± .01 ; .XXXX ± .005 ; MACHINE FINISH 63

MATERIAL: SEE TABLE
FINISH: SEE TABLE
DO NOT SCALE DRAWING

		DATE
DRAWN		10/13/80
CHECKED		10/15/80
ENGINEER		10/20/80

Honeywell
2103 UNION PLACE SIMI VALLEY CA 93063

TITLE: 6" FLANGE, ALUM

SIZE C | CODE IDENT 94295 | DRAWING NO B1A0009SDE1

SCALE 1/1 | SAVED AS: (DWG)RevE.DWG | SHEET 1 OF 1 | REV E

FILE B:\HPIVGSTD\HPESIZE1.DWG